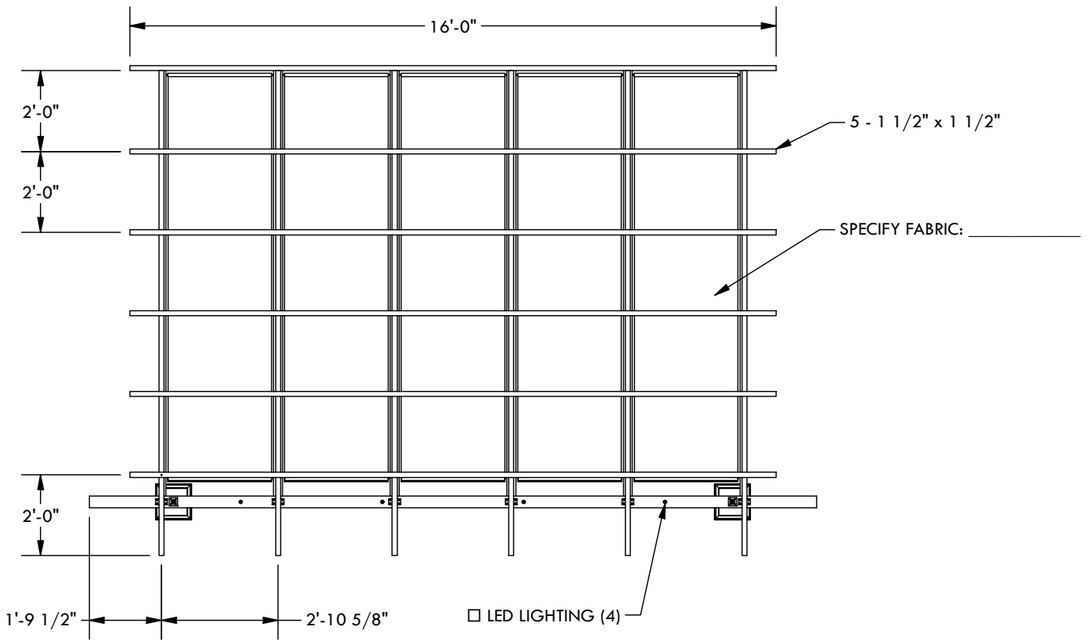

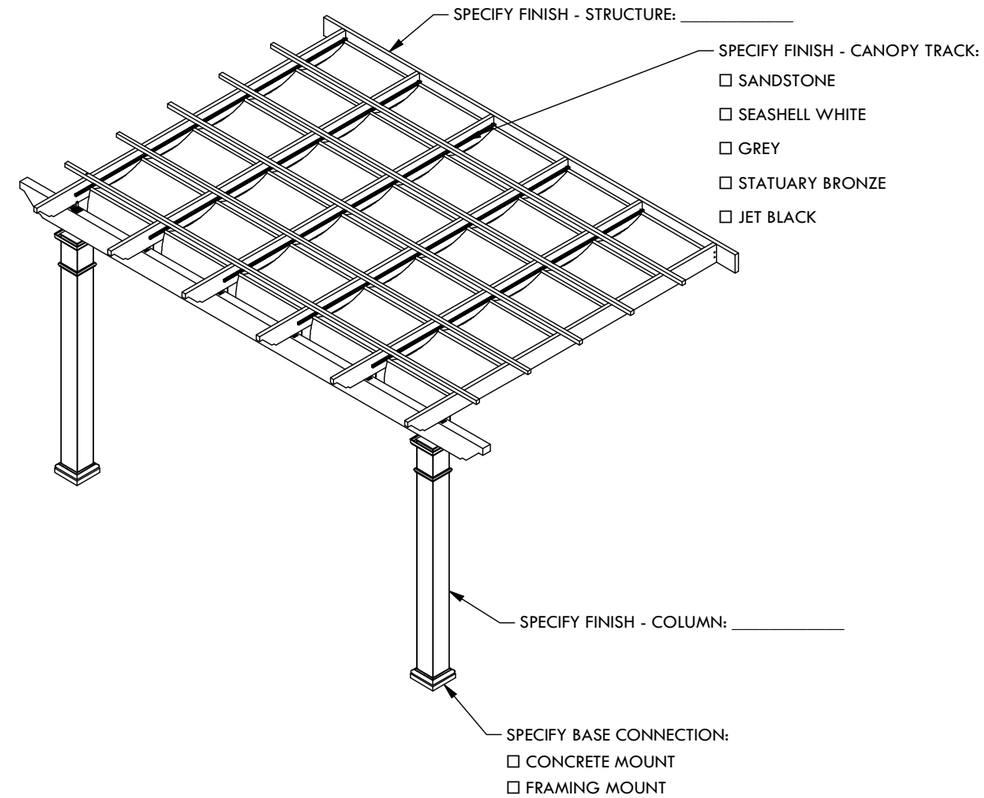

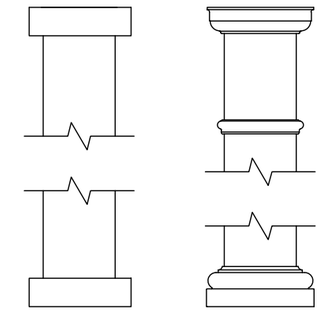

CLASSIC TRIM STANDARD TRIM

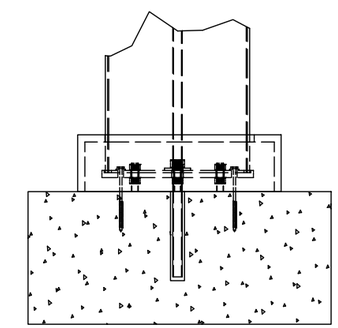

CONCRETE MOUNT

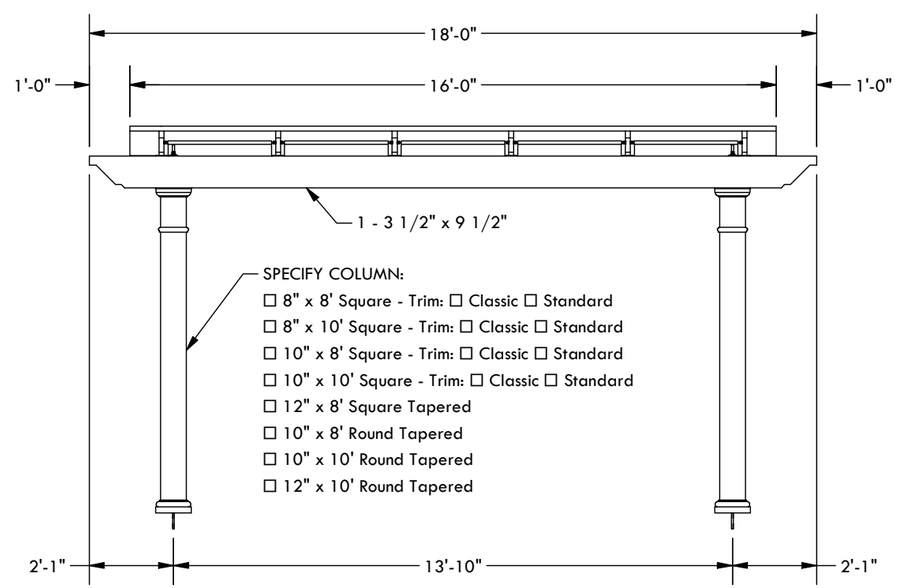

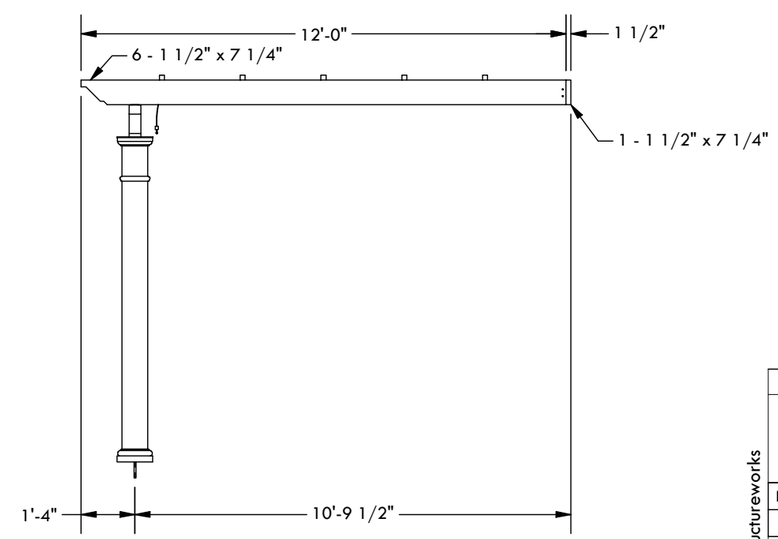

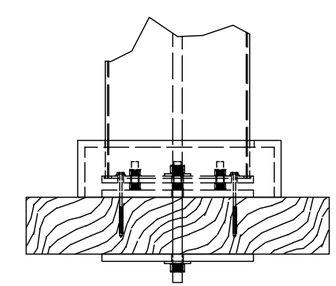

FRAMING MOUNT

DESCRIPTION

18' WIDE X 12' PROJECTION ATTACHED TREX PERGOLA + SHADEFLEX

REV	BY	DESCRITPION	DATE
1	NB	INITIAL RELEASE	02/17/23

© 2021 Structureworks

STRUCTUREWORKS™

www.structureworks.com 877.489.8064