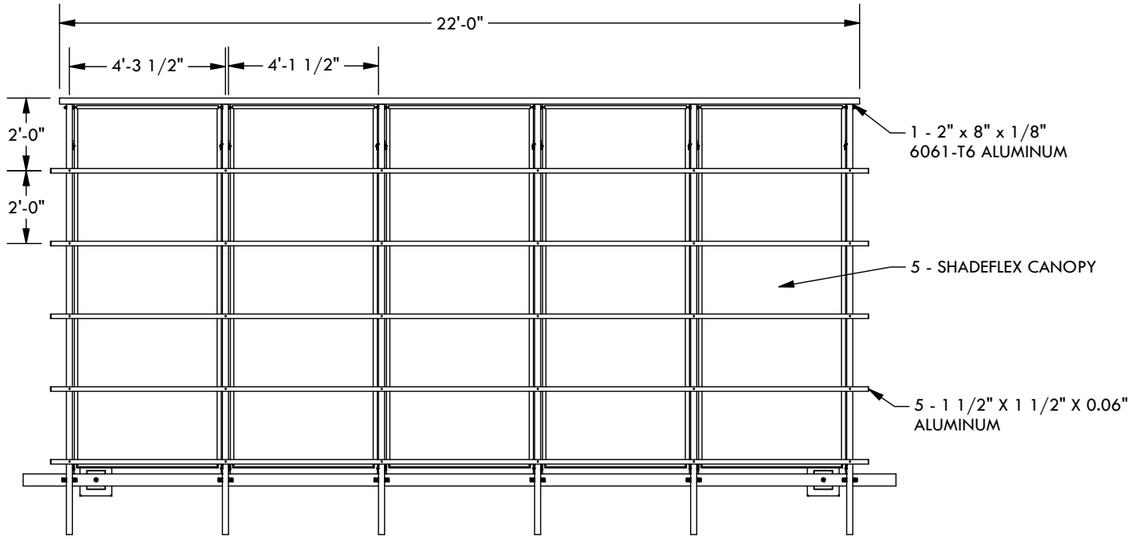

PLAN VIEW

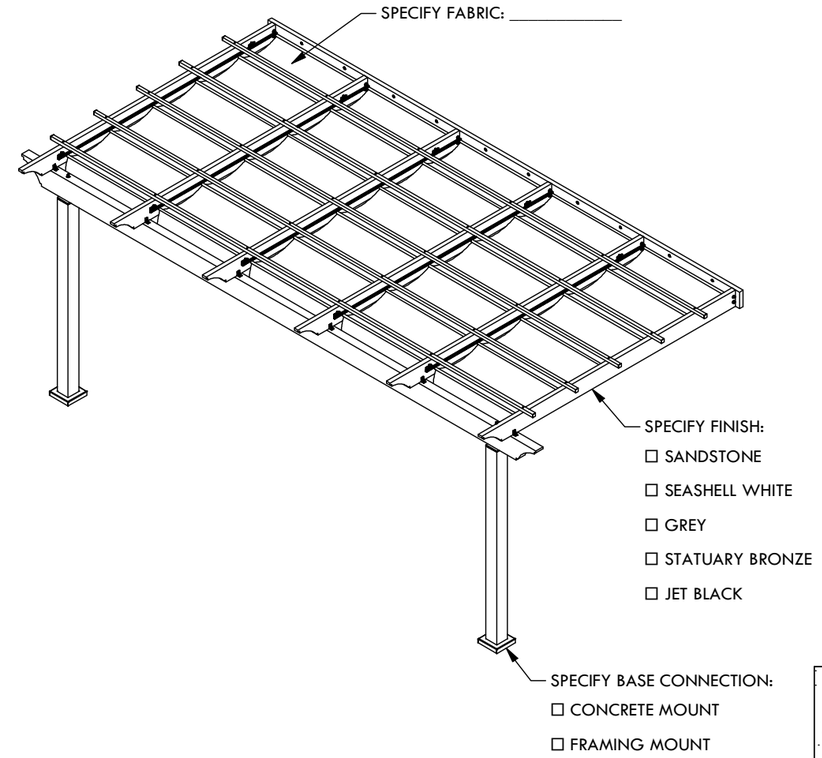

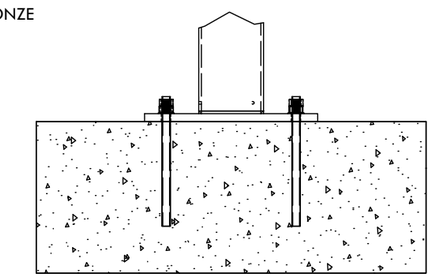

CONCRETE MOUNT

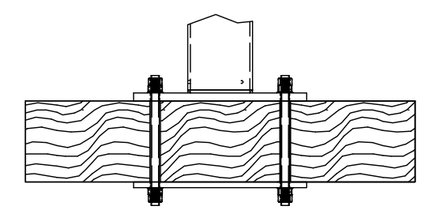

FRAMING MOUNT

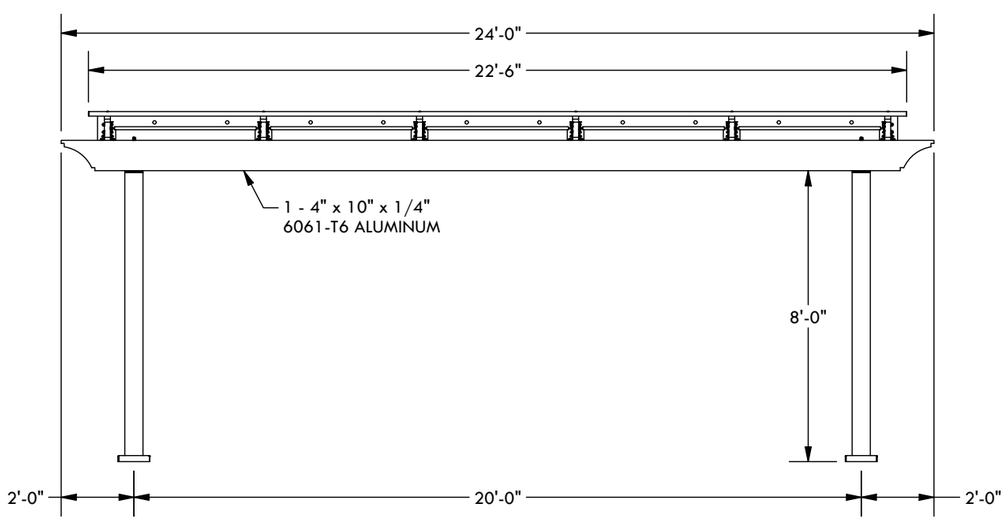

WIDTH ELEVATION

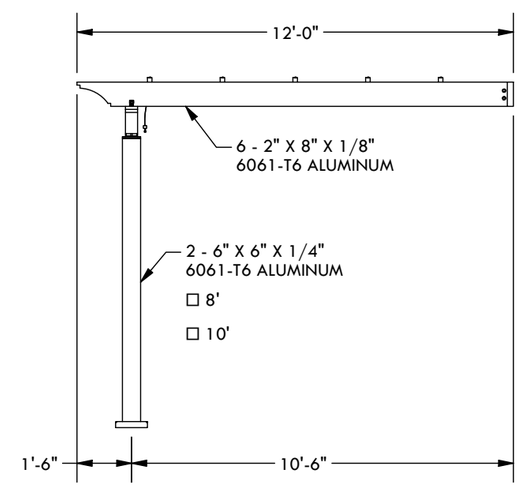

PROJECTION ELEVATION

DESCRIPTION

24' WIDE X 12' PROJECTION ATTACHED ATLAS

REV	BY	DESCRIPTION	DATE
	CL	INITIAL RELEASE	1/13/2026

STRUCTUREWORKS™

www.structureworks.com 877.489.8064

© 2026 Structureworks