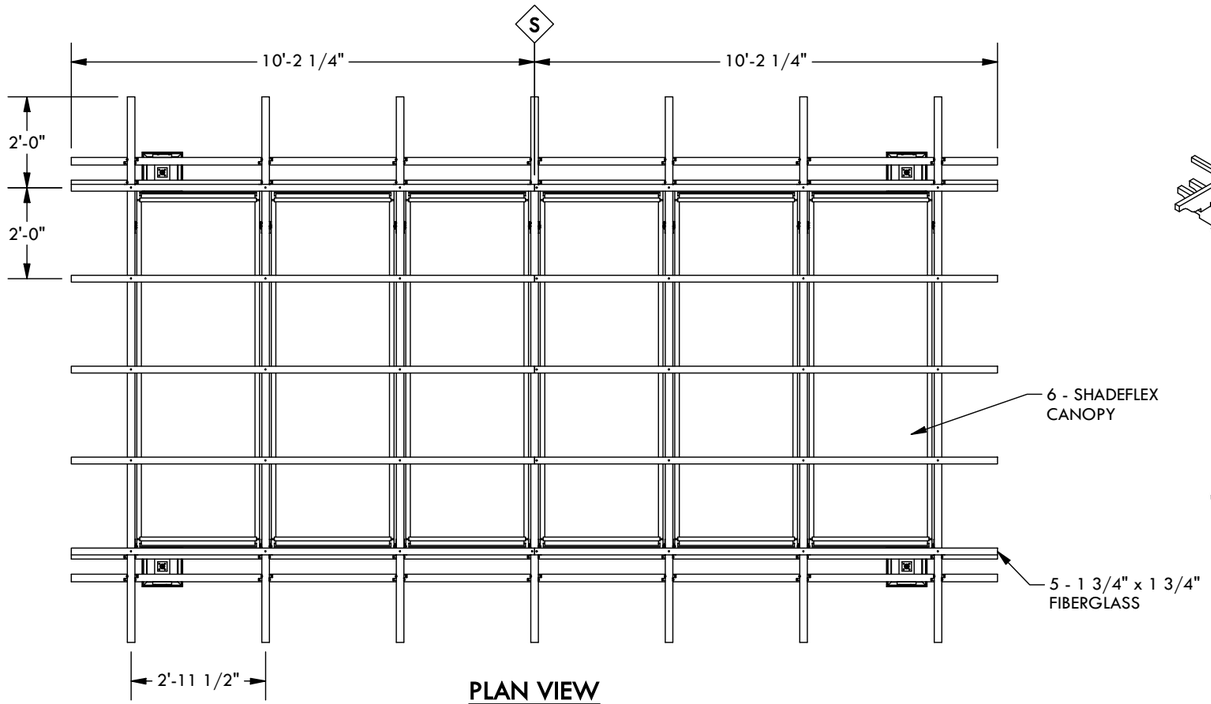

PLAN VIEW

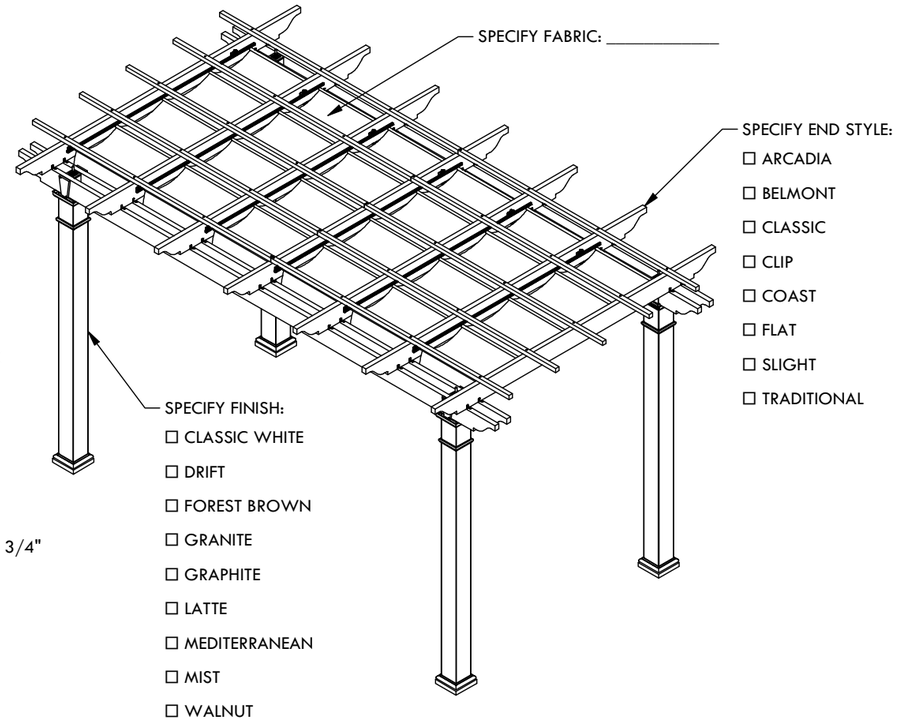

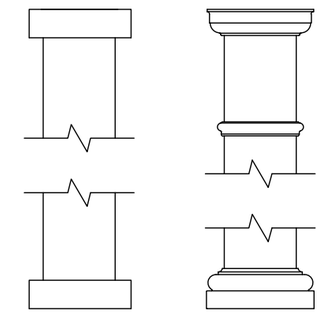

CLASSIC TRIM STANDARD TRIM

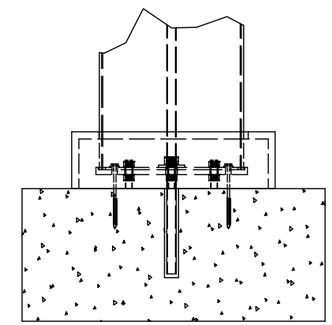

CONCRETE MOUNT

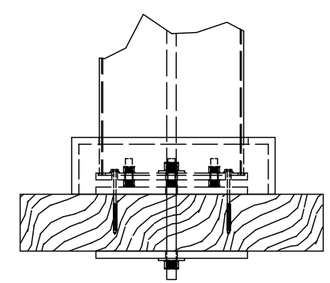

FRAMING MOUNT

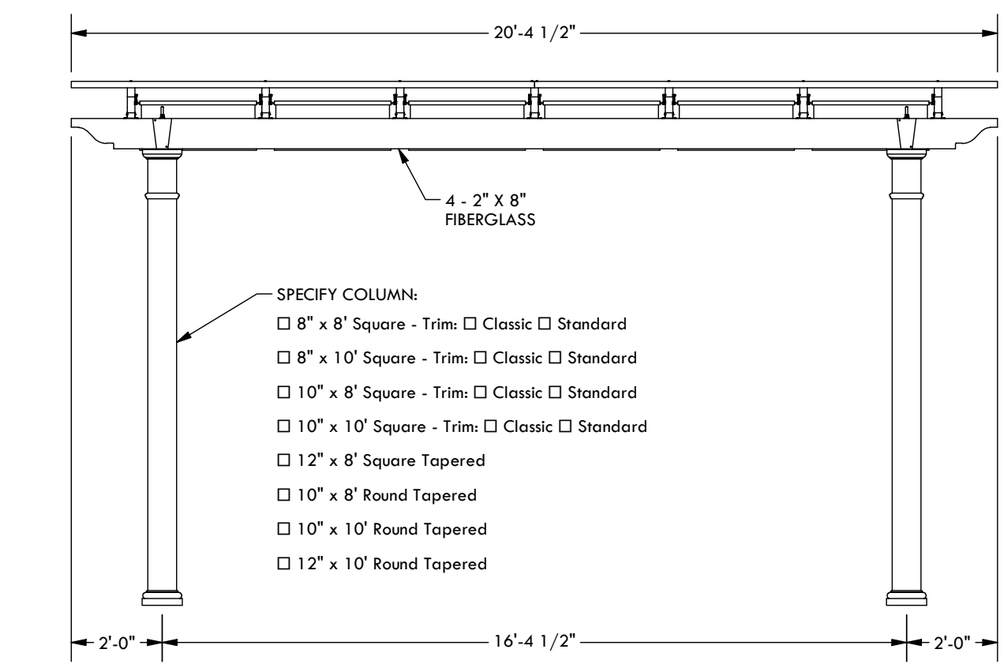

WIDTH ELEVATION

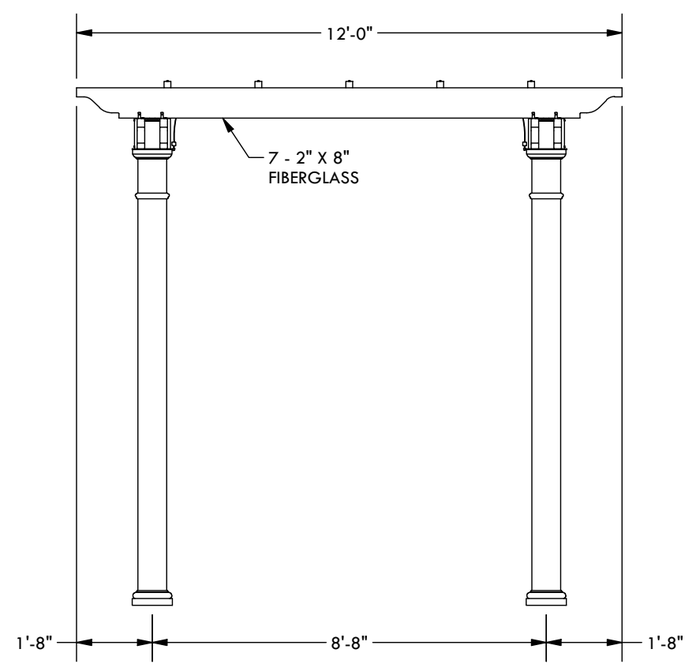

PROJECTION ELEVATION

DESCRIPTION

20' WIDE X 12' PROJECTION FREESTANDING WINDSOR

REV	BY	DESCRIPTION	DATE
	CL	INITIAL RELEASE	1/13/2026

© 2026 Structureworks

STRUCTUREWORKS™

www.structureworks.com 877.489.8064