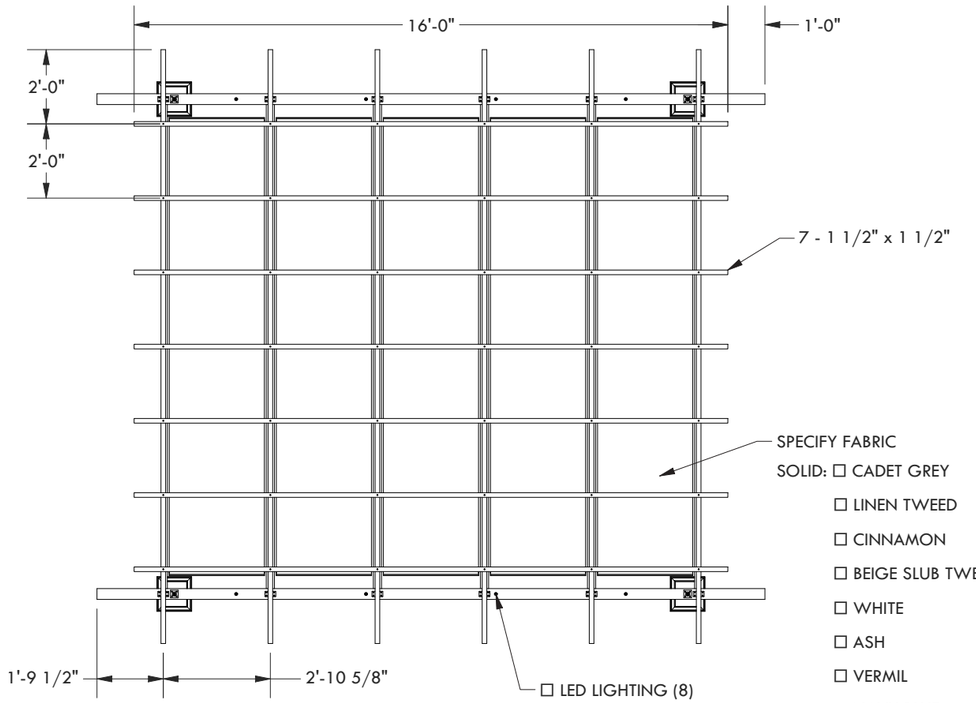

SPECIFY FABRIC

SOLID:
- ☐ CADET GREY
- ☐ LINEN TWEED
- ☐ CINNAMON
- ☐ BEIGE SLUB TWEED
- ☐ WHITE
- ☐ ASH
- ☐ VERMIL
- ☐ NAVY BLUE
- ☐ FOREST GREEN
- ☐ BLACK

AIRFLOW:
- ☐ BRONZE
- ☐ FOREST GREEN
- ☐ BLACK
- ☐ GREY
- ☐ WHITE

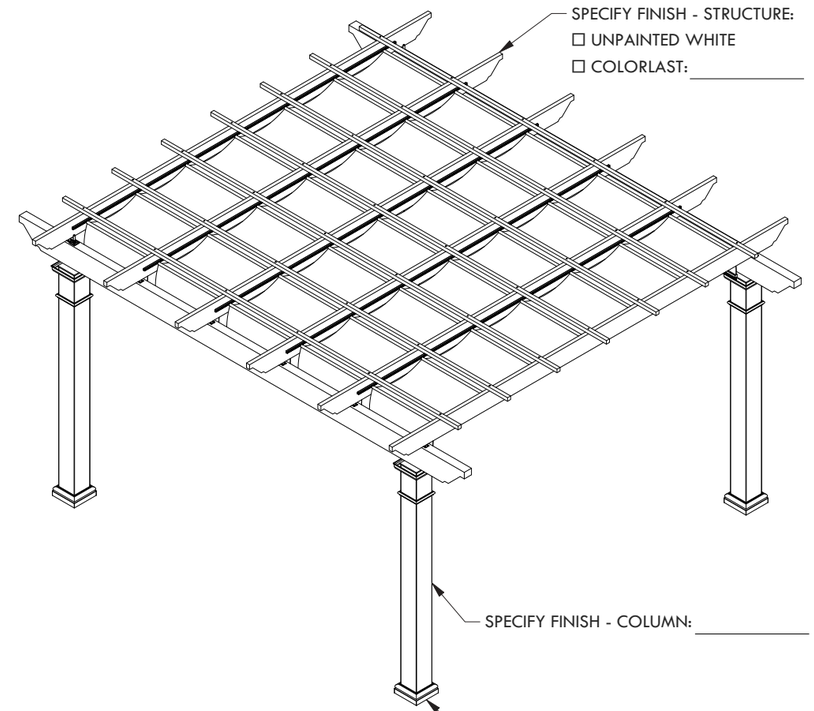

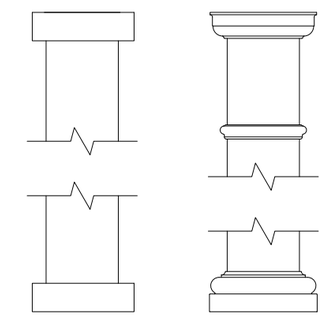

CLASSIC TRIM STANDARD TRIM

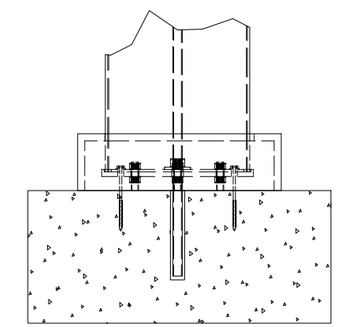

CONCRETE MOUNT

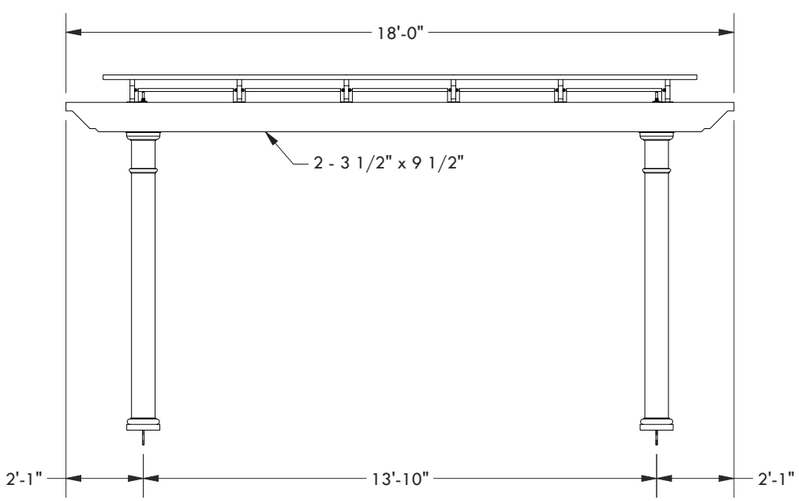

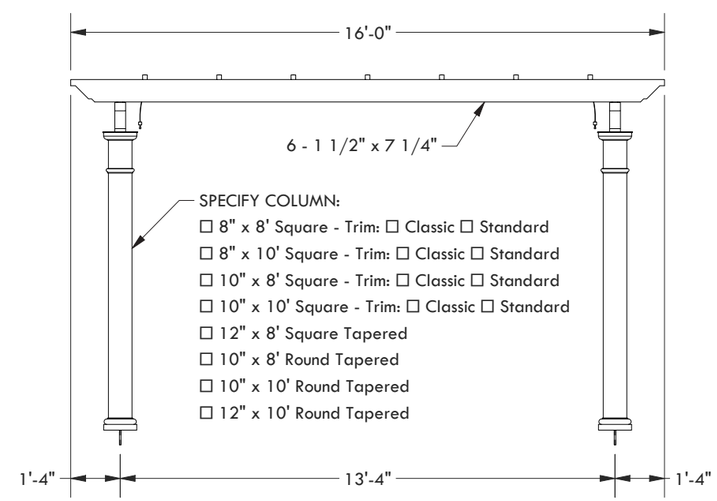

SPECIFY COLUMN:
- ☐ 8" x 8' Square - Trim: ☐ Classic ☐ Standard
- ☐ 8" x 10' Square - Trim: ☐ Classic ☐ Standard
- ☐ 10" x 8' Square - Trim: ☐ Classic ☐ Standard
- ☐ 10" x 10' Square - Trim: ☐ Classic ☐ Standard
- ☐ 12" x 8' Square Tapered
- ☐ 10" x 8' Round Tapered
- ☐ 10" x 10' Round Tapered
- ☐ 12" x 10' Round Tapered

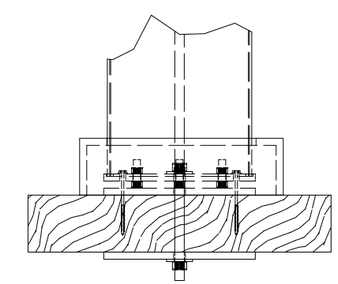

FRAMING MOUNT

DESCRIPTION

18' WIDE X 16' PROJECTION FREESTANDING TREX PERGOLA + SHADETREE

REV	BY	DESCRITPION	DATE
1	NB	INITIAL RELEASE	03/31/21

Trex® Pergola™

www.trexpergola.com 888.908.4965

© 2021 Structureworks