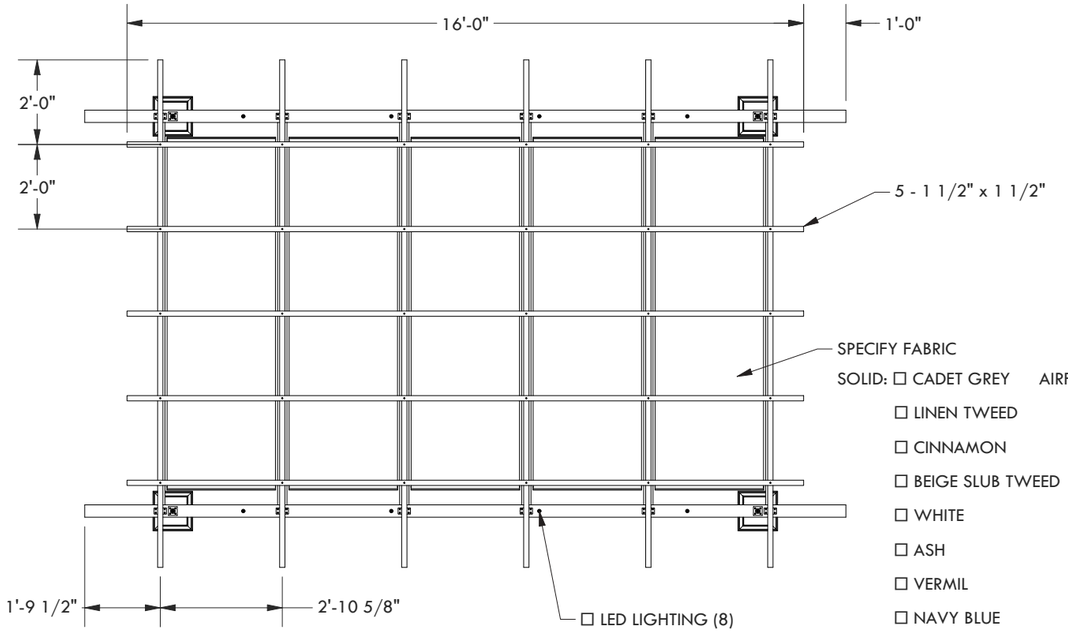

SPECIFY FABRIC

SOLID: ☐ CADET GREY
☐ LINEN TWEED
☐ CINNAMON
☐ BEIGE SLUB TWEED
☐ WHITE
☐ ASH
☐ VERMIL
☐ NAVY BLUE
☐ FOREST GREEN
☐ BLACK

AIRFLOW: ☐ BRONZE
☐ FOREST GREEN
☐ BLACK
☐ GREY
☐ WHITE

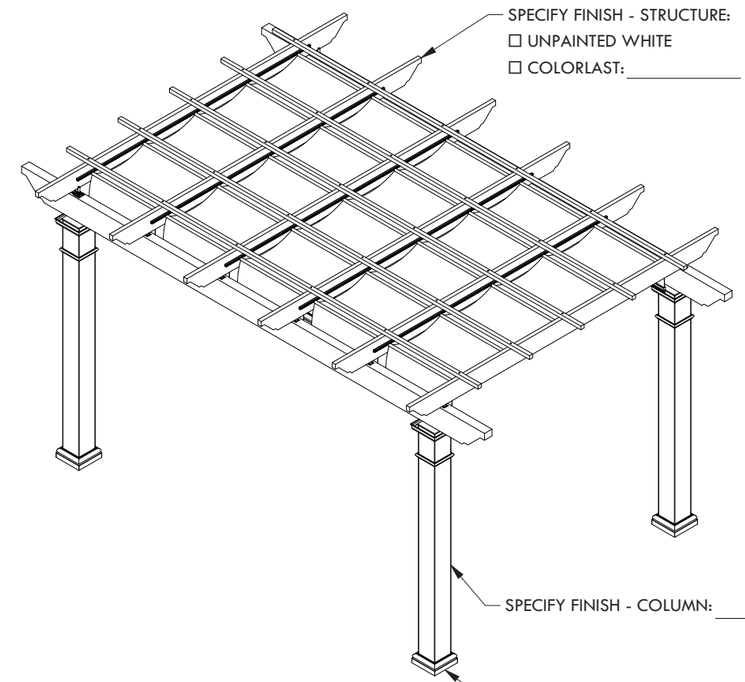

SPECIFY FINISH - STRUCTURE:
☐ UNPAINTED WHITE
☐ COLORLAST: _____

SPECIFY FINISH - COLUMN: _____

SPECIFY BASE CONNECTION:
☐ CONCRETE MOUNT
☐ FRAMING MOUNT

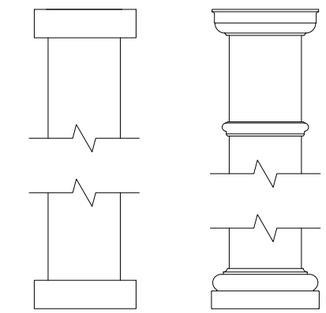

CLASSIC TRIM

STANDARD TRIM

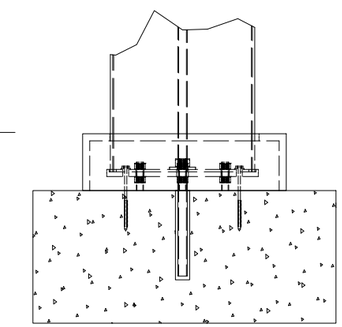

CONCRETE MOUNT

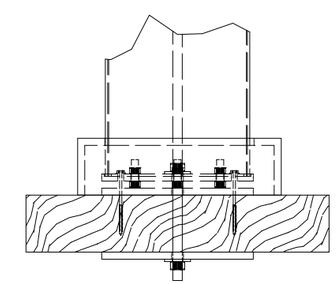

FRAMING MOUNT

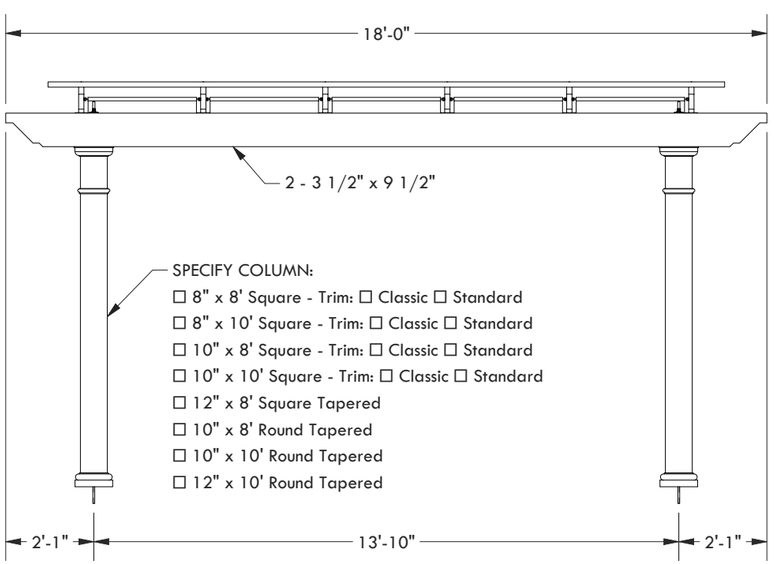

SPECIFY COLUMN:
☐ 8" x 8' Square - Trim: ☐ Classic ☐ Standard
☐ 8" x 10' Square - Trim: ☐ Classic ☐ Standard
☐ 10" x 8' Square - Trim: ☐ Classic ☐ Standard
☐ 10" x 10' Square - Trim: ☐ Classic ☐ Standard
☐ 12" x 8' Square Tapered
☐ 10" x 8' Round Tapered
☐ 10" x 10' Round Tapered
☐ 12" x 10' Round Tapered

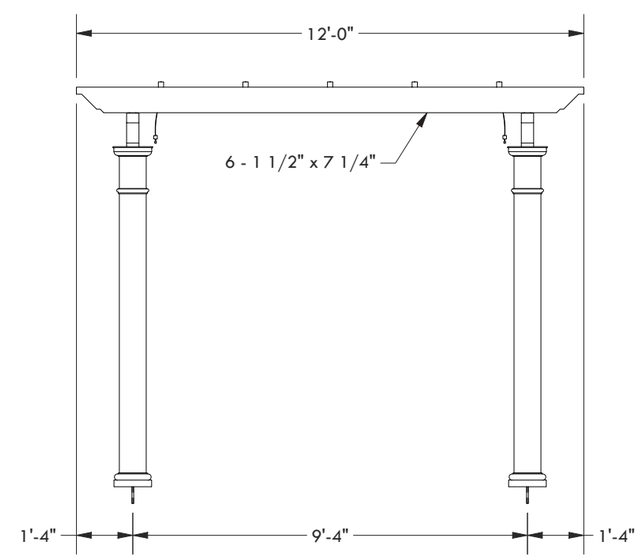

DESCRIPTION

18' WIDE X 12' PROJECTION FREESTANDING TREX PERGOLA + SHADETREE

REV	BY	DESCRITPION	DATE
1	NB	INITIAL RELEASE	03/31/21

Trex® Pergola™

www.trexpergola.com 888.908.4965

© 2021 Structureworks