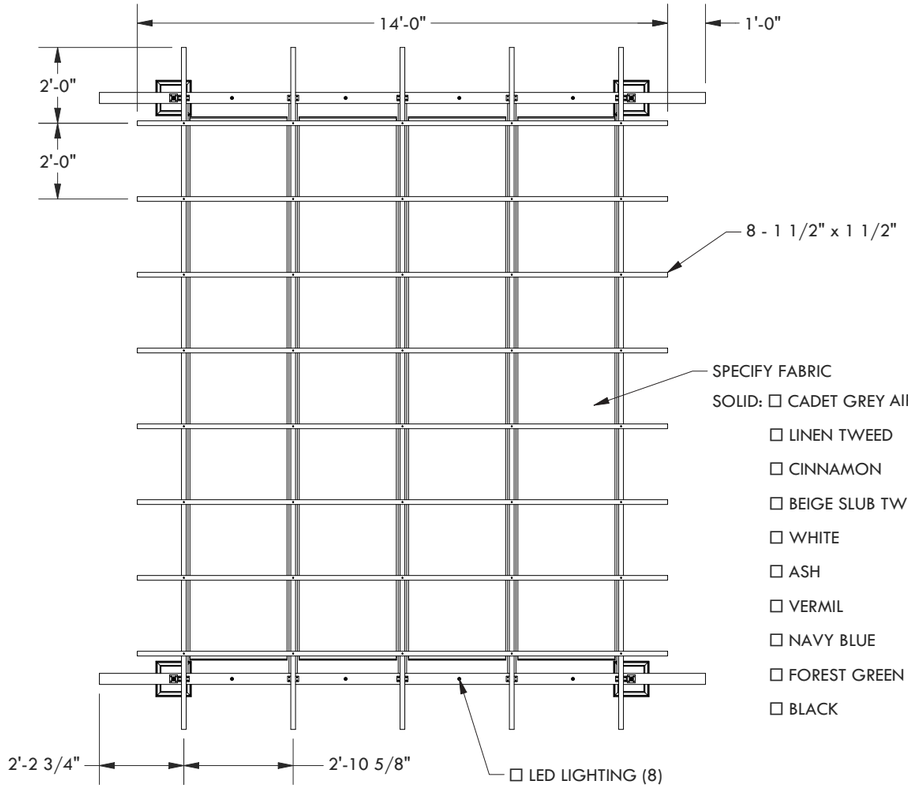

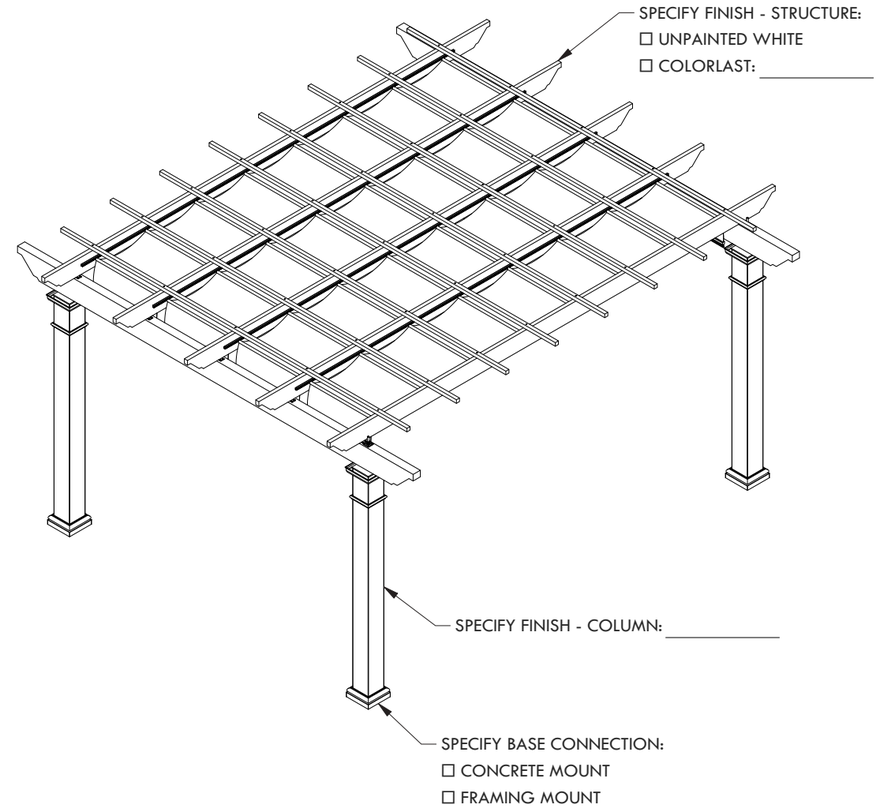

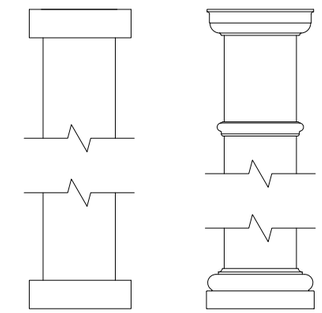

CLASSIC TRIM STANDARD TRIM

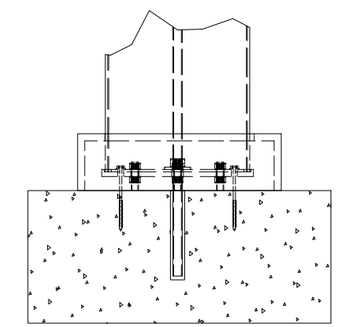

CONCRETE MOUNT

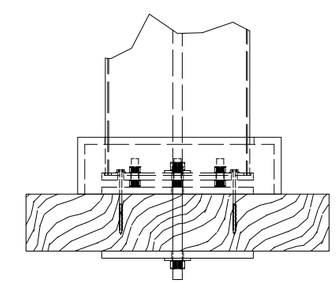

FRAMING MOUNT

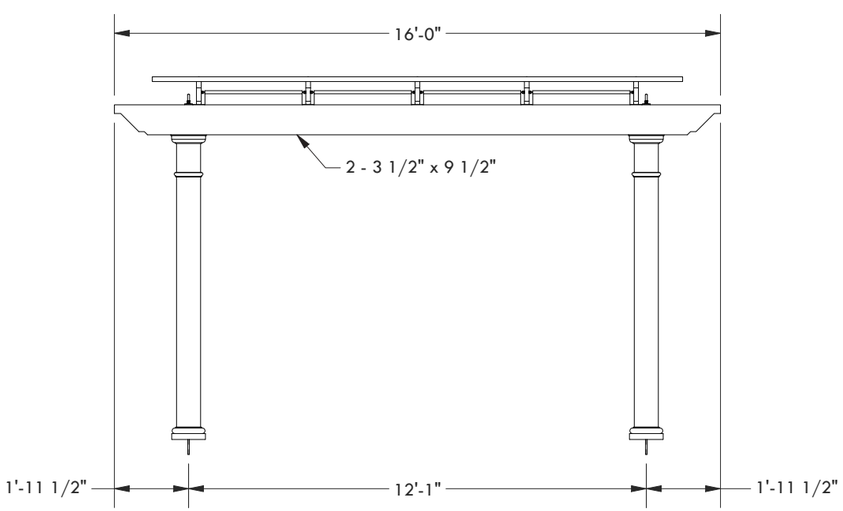

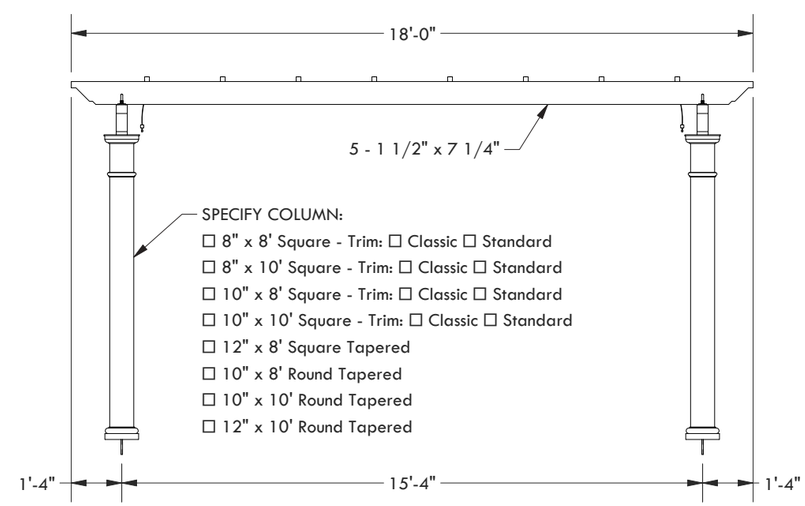

DESCRIPTION

16' WIDE X 18' PROJECTION FREESTANDING TREX PERGOLA + SHADETREE

REV	BY	DESCRITPION	DATE
1	NB	INITIAL RELEASE	03/31/21

Trex® Pergola™

www.trexpergola.com 888.908.4965

© 2021 Structureworks