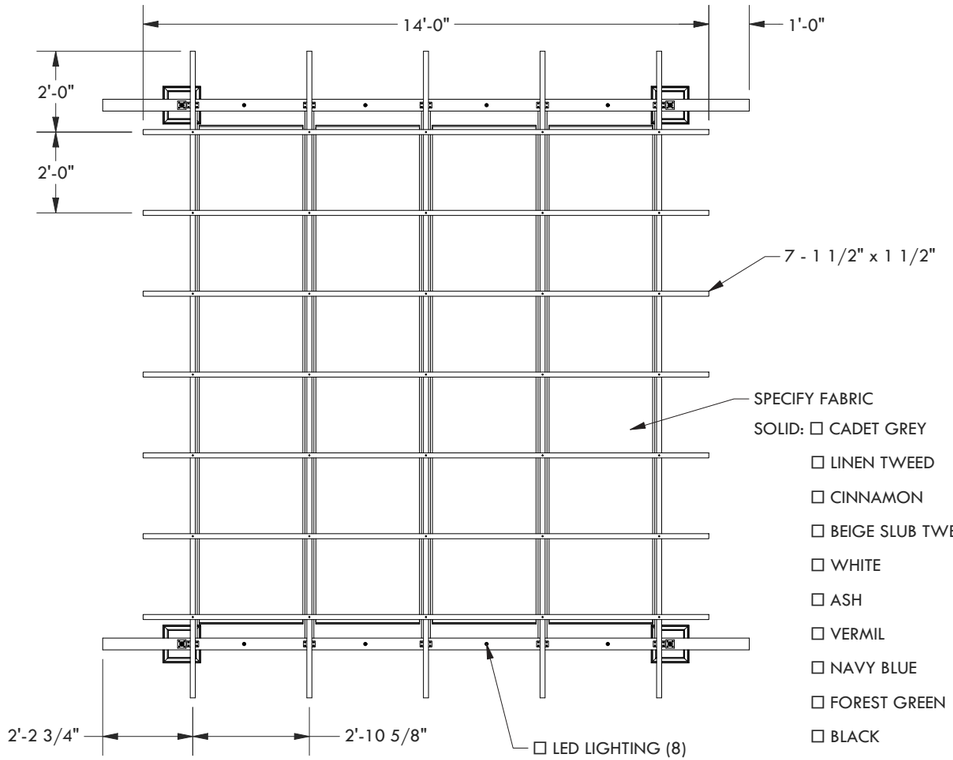

SOLID: ☐ CADET GREY
☐ LINEN TWEED
☐ CINNAMON
☐ BEIGE SLUB TWEED
☐ WHITE
☐ ASH
☐ VERMIL
☐ NAVY BLUE
☐ FOREST GREEN
☐ BLACK

AIRFLOW: ☐ BRONZE
☐ FOREST GREEN
☐ BLACK
☐ GREY
☐ WHITE

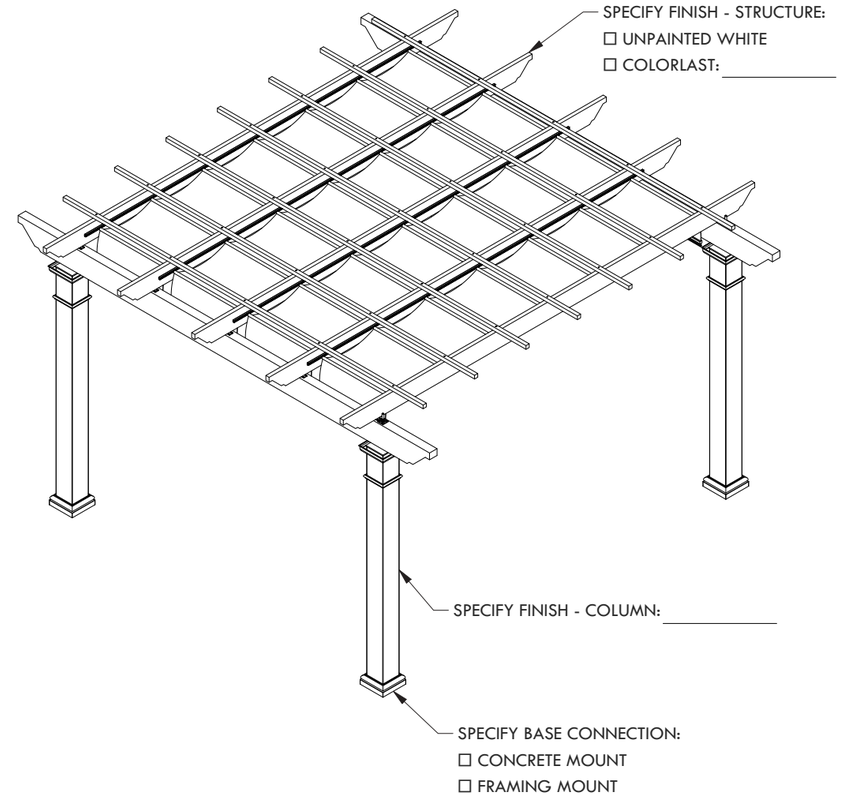

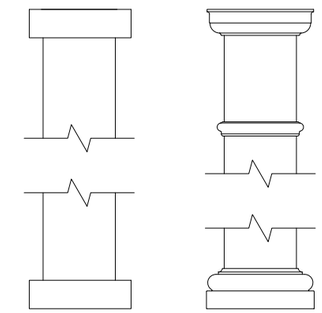

CLASSIC TRIM STANDARD TRIM

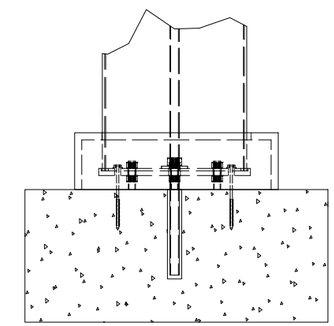

CONCRETE MOUNT

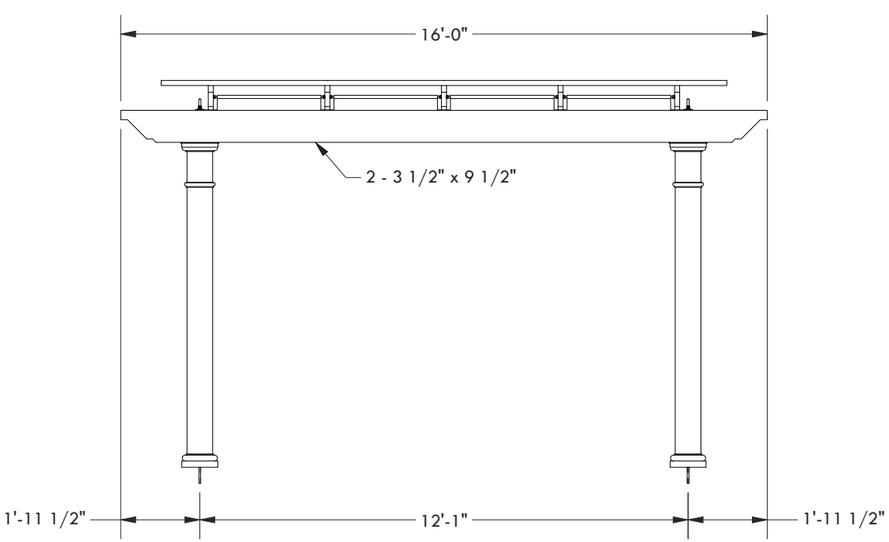

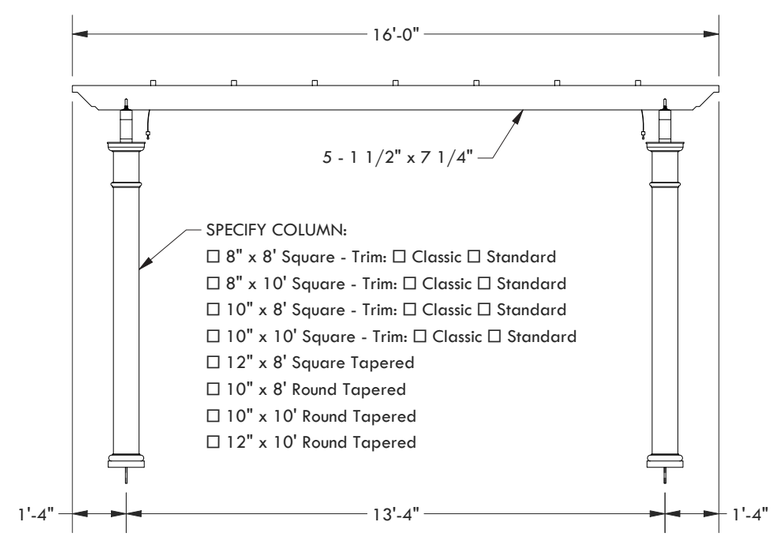

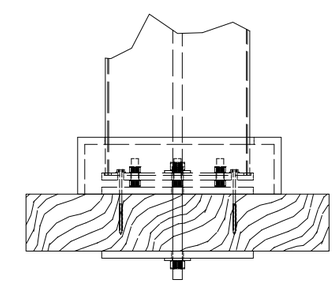

FRAMING MOUNT

DESCRIPTION

16' WIDE X 16' PROJECTION FREESTANDING TREX PERGOLA + SHADETREE

REV	BY	DESCRITPION	DATE
1	NB	INITIAL RELEASE	03/31/21

Trex® Pergola™

www.trexpergola.com 888.908.4965

© 2021 Structureworks