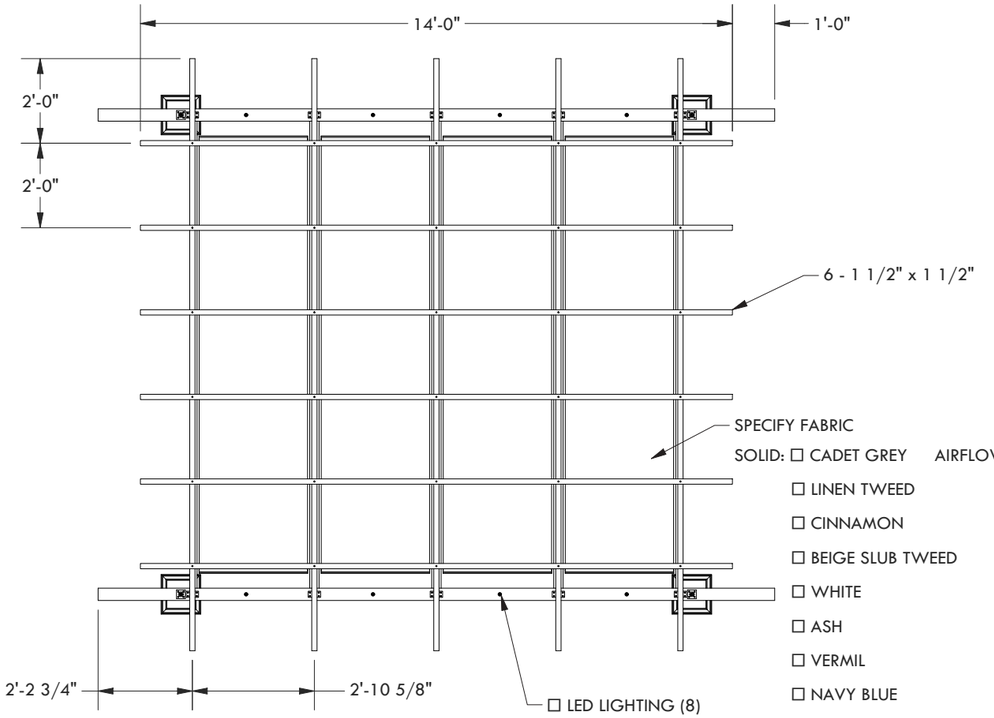

SPECIFY FABRIC

SOLID:	AIRFLOW:
☐ CADET GREY	☐ BRONZE
☐ LINEN TWEED	☐ FOREST GREEN
☐ CINNAMON	☐ BLACK
☐ BEIGE SLUB TWEED	☐ GREY
☐ WHITE	☐ WHITE
☐ ASH	
☐ VERMIL	
☐ NAVY BLUE	
☐ FOREST GREEN	
☐ BLACK	

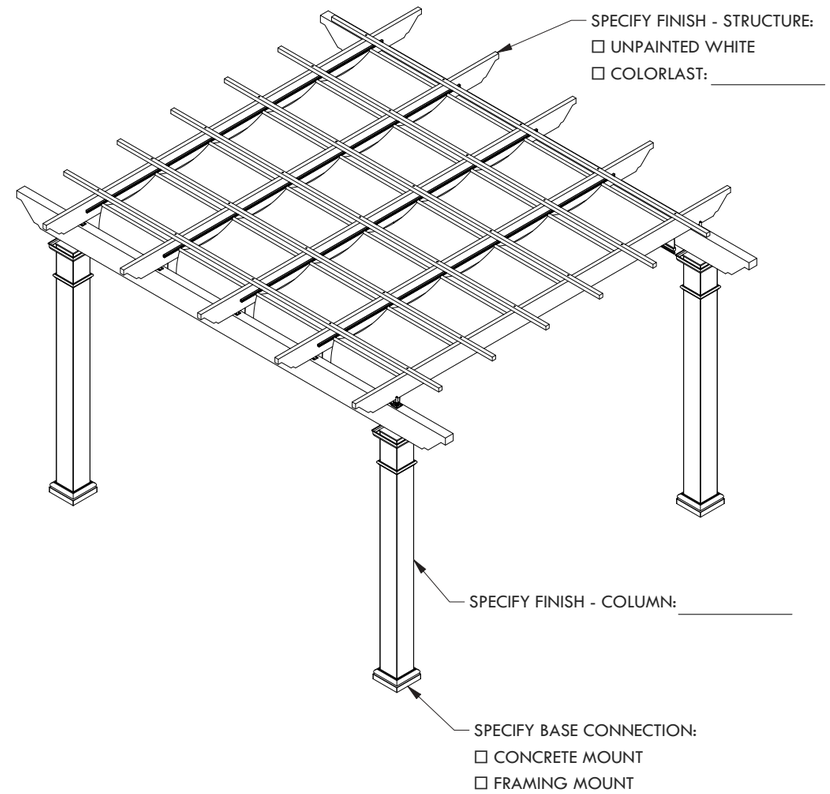

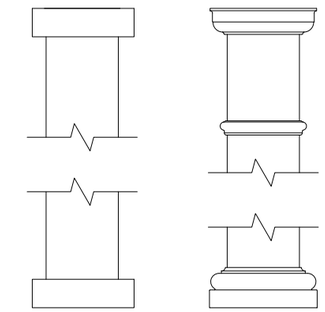

CLASSIC TRIM STANDARD TRIM

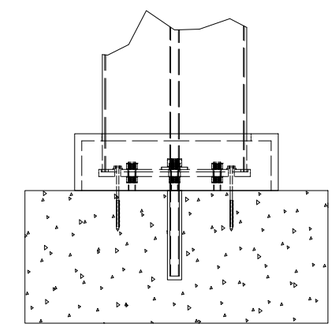

CONCRETE MOUNT

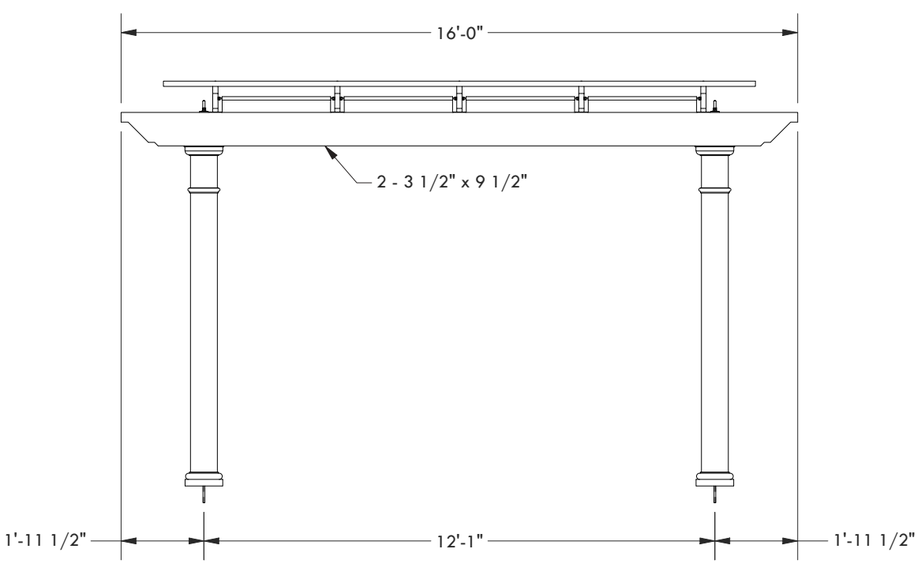

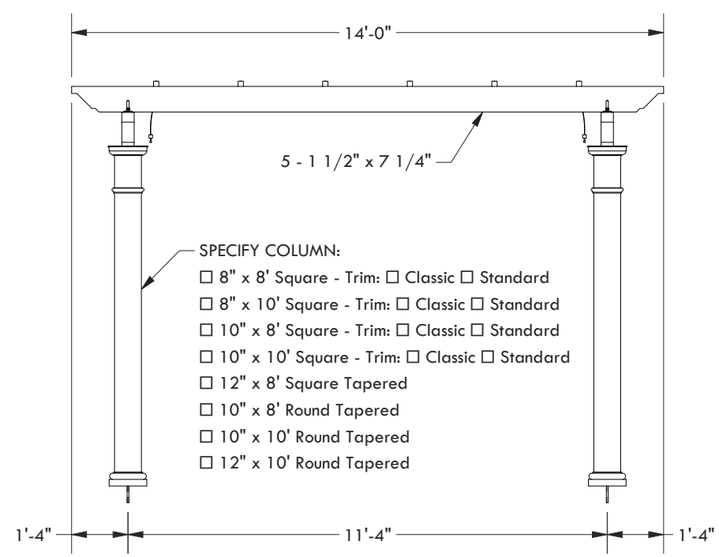

SPECIFY COLUMN:
- ☐ 8" x 8' Square - Trim: ☐ Classic ☐ Standard
- ☐ 8" x 10' Square - Trim: ☐ Classic ☐ Standard
- ☐ 10" x 8' Square - Trim: ☐ Classic ☐ Standard
- ☐ 10" x 10' Square - Trim: ☐ Classic ☐ Standard
- ☐ 12" x 8' Square Tapered
- ☐ 10" x 8' Round Tapered
- ☐ 10" x 10' Round Tapered
- ☐ 12" x 10' Round Tapered

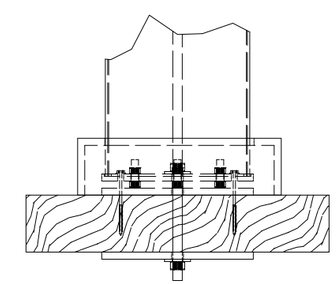

FRAMING MOUNT

DESCRIPTION

16' WIDE X 14' PROJECTION FREESTANDING TREX PERGOLA + SHADETREE

REV	BY	DESCRITPION	DATE
1	NB	INITIAL RELEASE	03/31/21

© 2021 Structureworks

Trex® Pergola™

www.trexpergola.com 888.908.4965