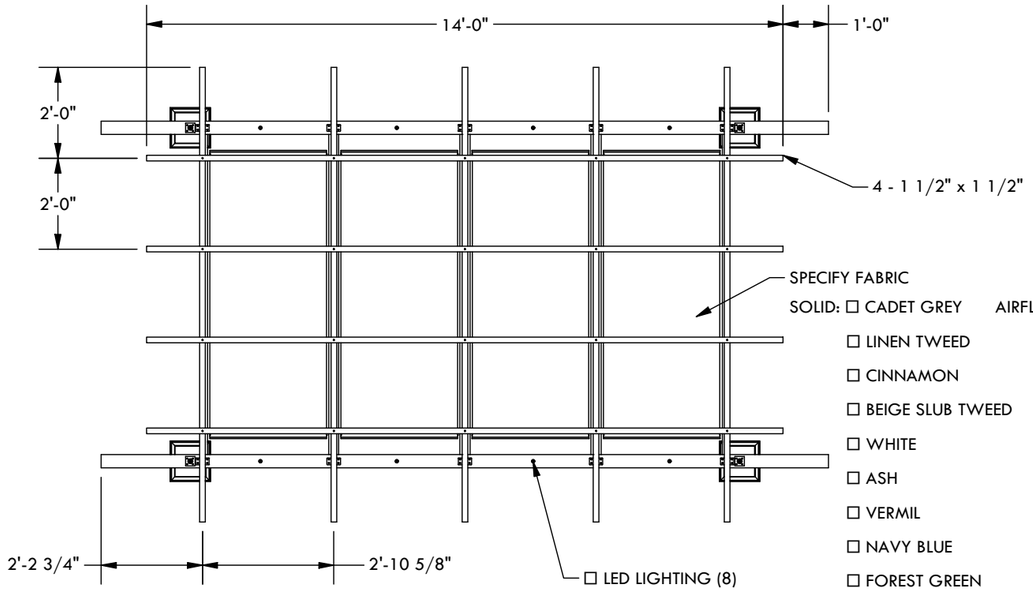

SOLID:
- ☐ CADET GREY
- ☐ LINEN TWEED
- ☐ CINNAMON
- ☐ BEIGE SLUB TWEED
- ☐ WHITE
- ☐ ASH
- ☐ VERMIL
- ☐ NAVY BLUE
- ☐ FOREST GREEN
- ☐ BLACK

AIRFLOW:
- ☐ BRONZE
- ☐ FOREST GREEN
- ☐ BLACK
- ☐ GREY
- ☐ WHITE

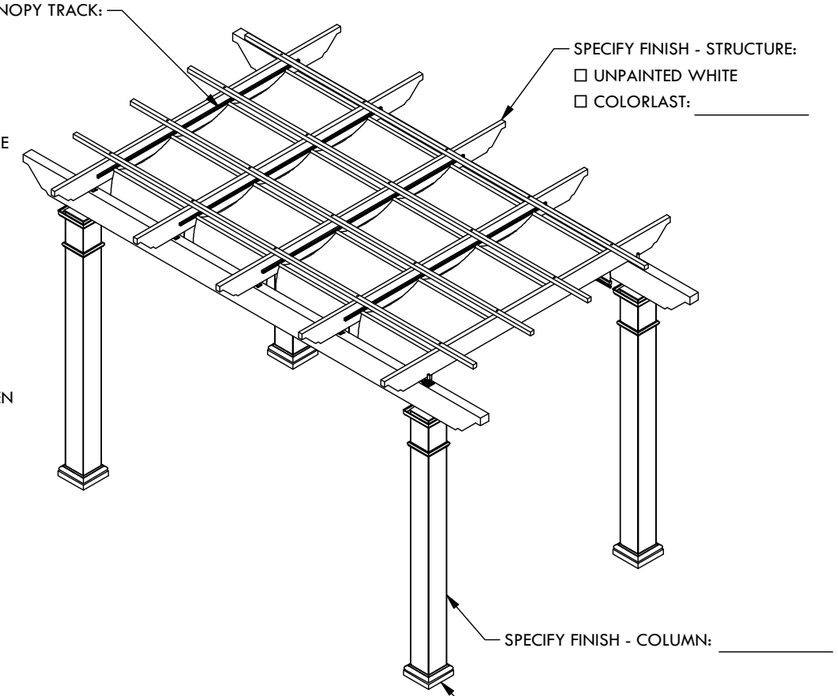

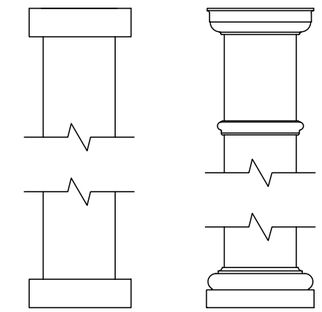

CLASSIC TRIM STANDARD TRIM

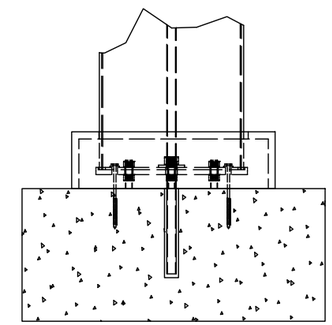

CONCRETE MOUNT

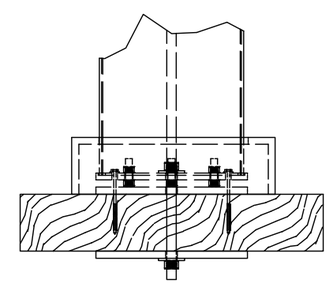

FRAMING MOUNT

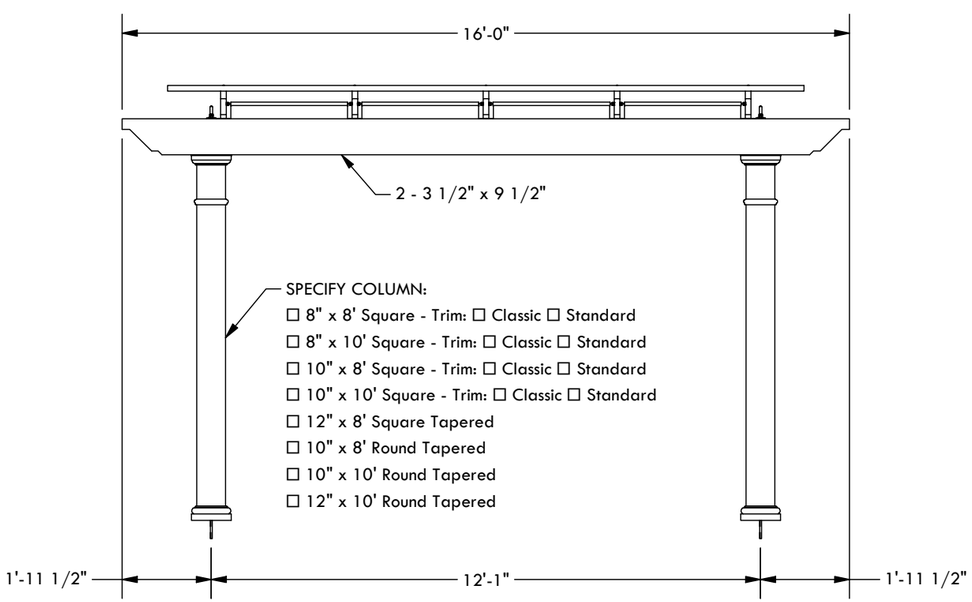

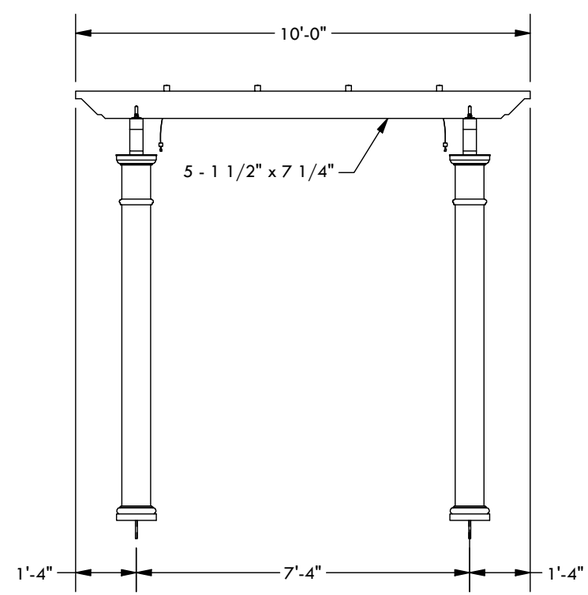

DESCRIPTION

16' WIDE X 10' PROJECTION FREESTANDING TREX PERGOLA + SHADETREE

REV	BY	DESCRITPION	DATE
1	NB	INITIAL RELEASE	3/31/2021

© 2021 Structureworks

STRUCTUREWORKS™

www.structureworks.com 877.489.8064