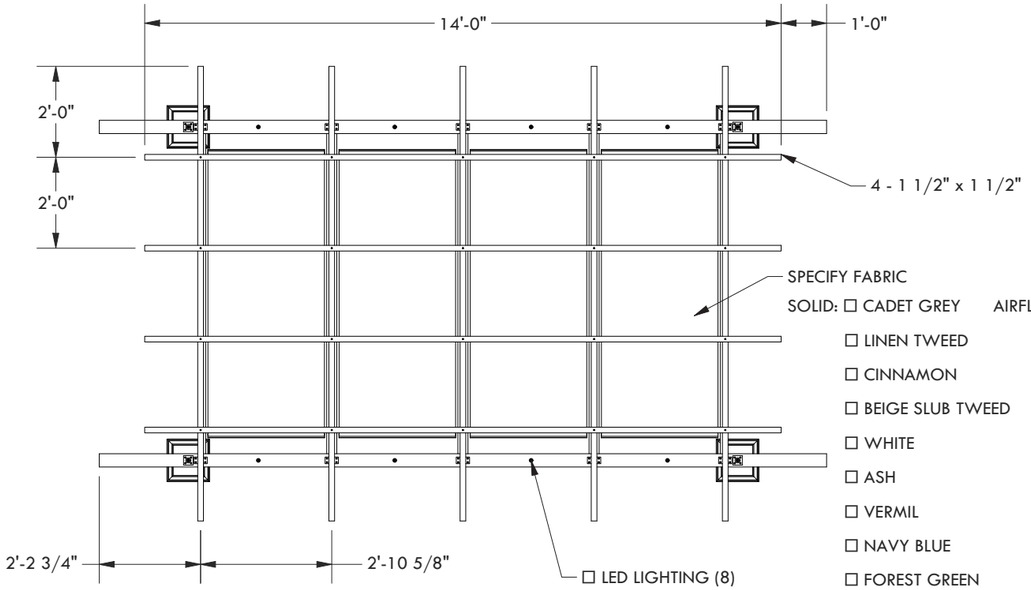

SPECIFY FABRIC

SOLID:	AIRFLOW:
☐ CADET GREY	☐ BRONZE
☐ LINEN TWEED	☐ FOREST GREEN
☐ CINNAMON	☐ BLACK
☐ BEIGE SLUB TWEED	☐ GREY
☐ WHITE	☐ WHITE
☐ ASH	
☐ VERMIL	
☐ NAVY BLUE	
☐ FOREST GREEN	
☐ BLACK	

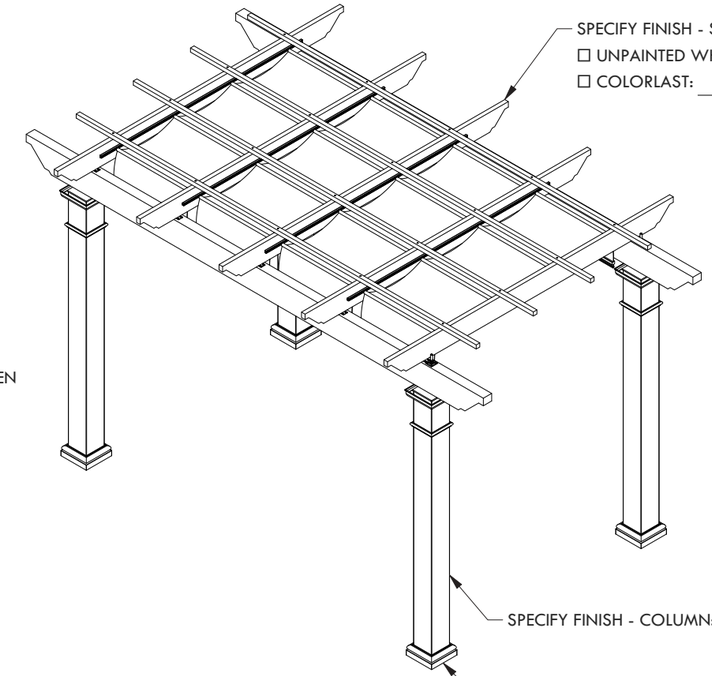

SPECIFY FINISH - STRUCTURE:
☐ UNPAINTED WHITE
☐ COLORLAST: _____

SPECIFY FINISH - COLUMN: _____

SPECIFY BASE CONNECTION:
☐ CONCRETE MOUNT
☐ FRAMING MOUNT

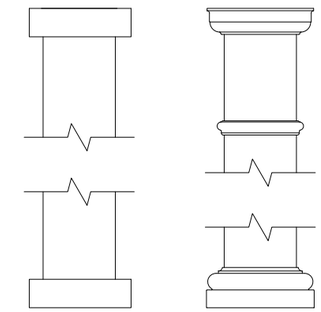

CLASSIC TRIM STANDARD TRIM

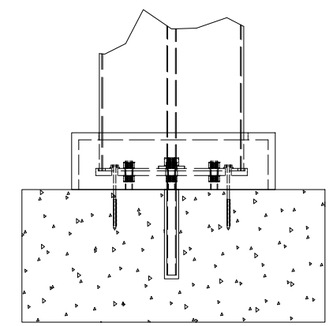

CONCRETE MOUNT

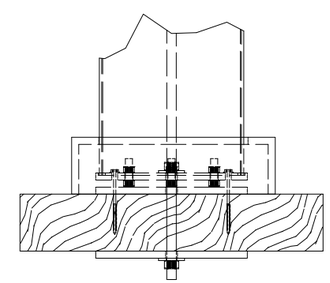

FRAMING MOUNT

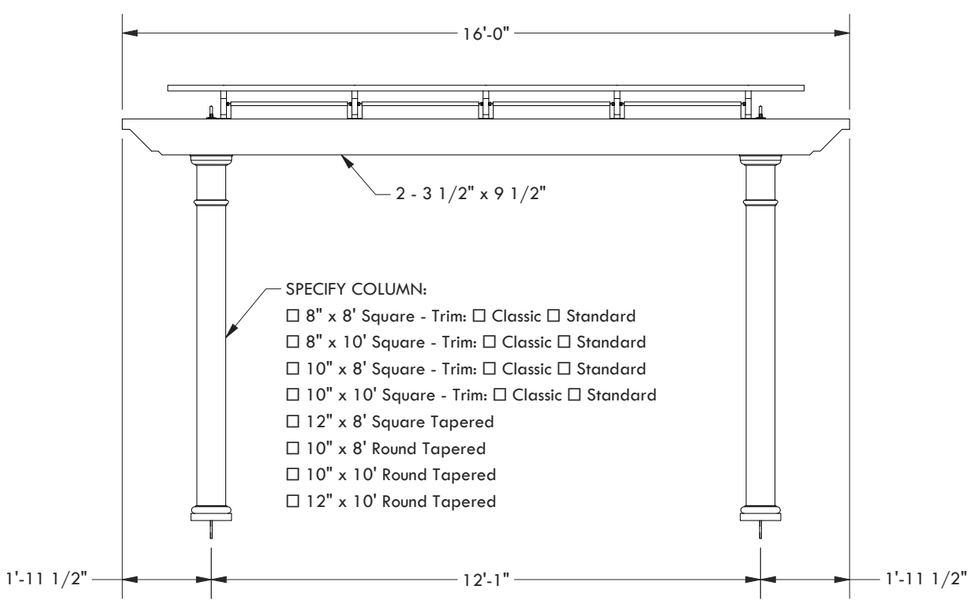

SPECIFY COLUMN:
☐ 8" x 8' Square - Trim: ☐ Classic ☐ Standard
☐ 8" x 10' Square - Trim: ☐ Classic ☐ Standard
☐ 10" x 8' Square - Trim: ☐ Classic ☐ Standard
☐ 10" x 10' Square - Trim: ☐ Classic ☐ Standard
☐ 12" x 8' Square Tapered
☐ 10" x 8' Round Tapered
☐ 10" x 10' Round Tapered
☐ 12" x 10' Round Tapered

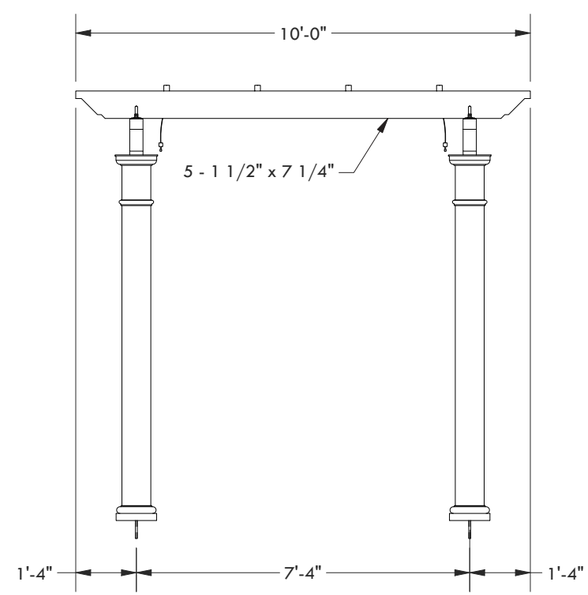

DESCRIPTION

16' WIDE X 10' PROJECTION FREESTANDING TREX PERGOLA + SHADETREE

REV	BY	DESCRITPION	DATE
1	NB	INITIAL RELEASE	03/31/21

Trex® Pergola™

www.trexpergola.com 888.908.4965

© 2021 Structureworks